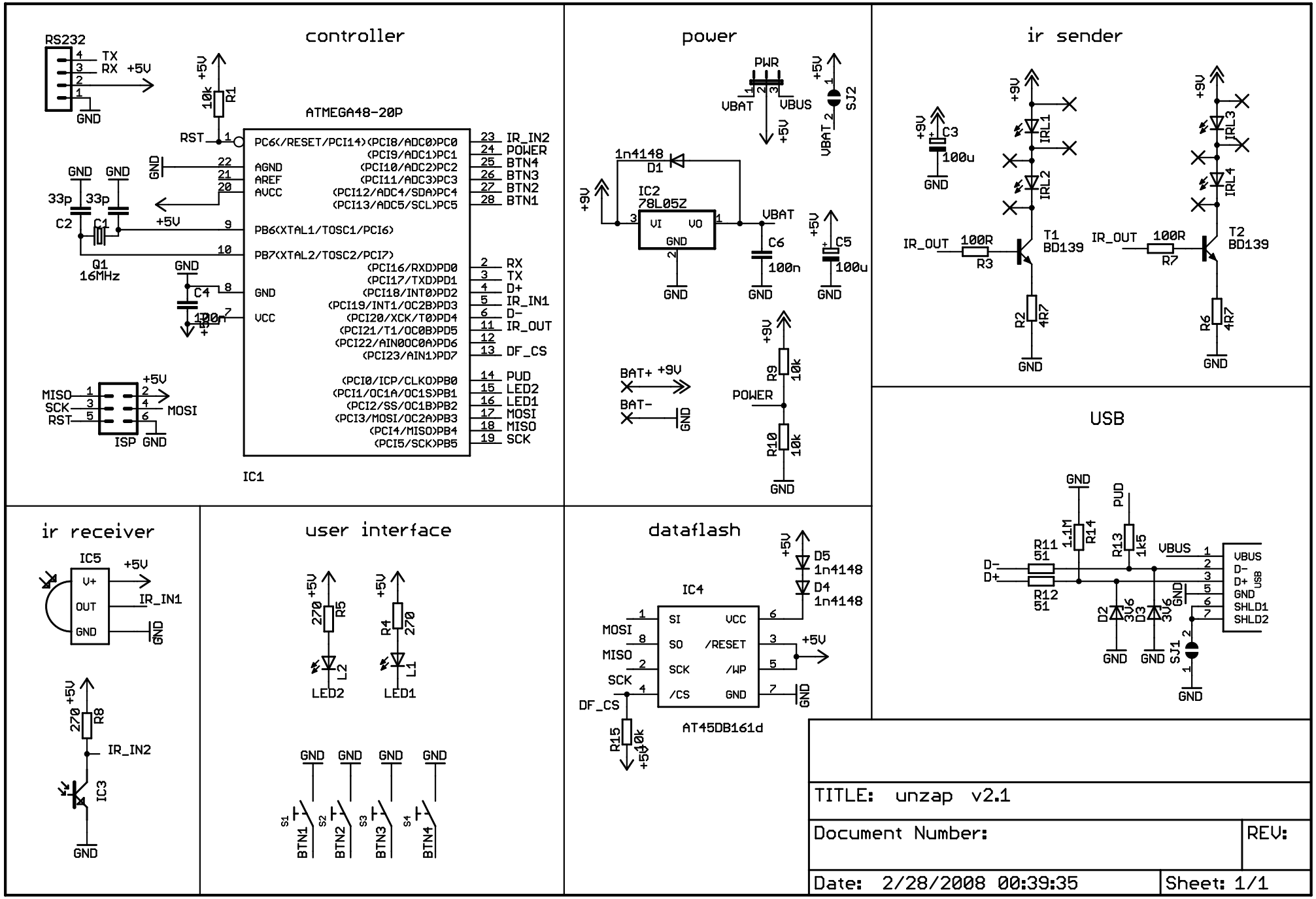
controller
RS232
TX
RX
+5V
GND
10k
R1
RST
ATMEGA48-20P
PC6(/RESET/PCI14)(PCI8/ADC0)PC0
(PCI9/ADC1)PC1
(PCI10/ADC2)PC2
(PCI11/ADC3)PC3
(PCI12/ADC4/SDA)PC4
(PCI13/ADC5/SCL)PC5
AGND
AREF
AVCC
PB6(XTAL1/TOSC1/PCI6)
PB7(XTAL2/TOSC2/PCI7)
(PCI16/RXD)PD0
(PCI17/TXD)PD1
(PCI18/INT0)PD2
(PCI19/INT1/OC2B)PD3
(PCI20/XCK/T0)PD4
(PCI21/T1/OC0B)PD5
(PCI22/AIN0OC0A)PD6
(PCI23/AIN1)PD7
(PCI0/ICP/CLKO)PB0
(PCI1/OC1A/OC1S)PB1
(PCI2/SS/OC1B)PB2
(PCI3/MOSI/OC2A)PB3
(PCI4/MISO)PB4
(PCI5/SCK)PB5
GND
VCC
IR_IN2
POWER
BTN4
BTN3
BTN2
BTN1
RX
TX
D+
IR_IN1
D-
IR_OUT
DF_CS
PUD
LED2
LED1
MOSI
MISO
SCK
33p
C2
C1
Q1
16MHz
C4
100n
MISO
SCK
RST
ISP
IC1
power
PWR
VBAT
VBUS
SJ2
1n4148
D1
IC2
78L05Z
VI
VO
C6
100n
C5
100u
BAT+
BAT-
R9
10k
R10
10k
ir sender
C3
100u
IRL1
IRL2
IRL3
IRL4
IR_OUT
100R
R3
T1
BD139
R7
T2
R2
4R7
R6
ir receiver
IC5
V+
OUT
IR_IN1
R8
270
IR_IN2
IC3
user interface
R5
R4
L2
L1
S1
S2
S3
S4
BTN1
BTN2
BTN3
BTN4
dataflash
IC4
SI
SO
SCK
/CS
VCC
/RESET
/WP
D5
1n4148
D4
1n4148
MOSI
MISO
SCK
DF_CS
R15
10k
AT45DB161d
USB
R11
51
R12
51
1.1M
R14
R13
1k5
D2
3V6
D3
3V6
SJ1
VBUS
D-
D+
GND
SHLD1
SHLD2
TITLE: unzap v2.1
Document Number:
REV:
Date: 2/28/2008 00:39:35
Sheet: 1/1