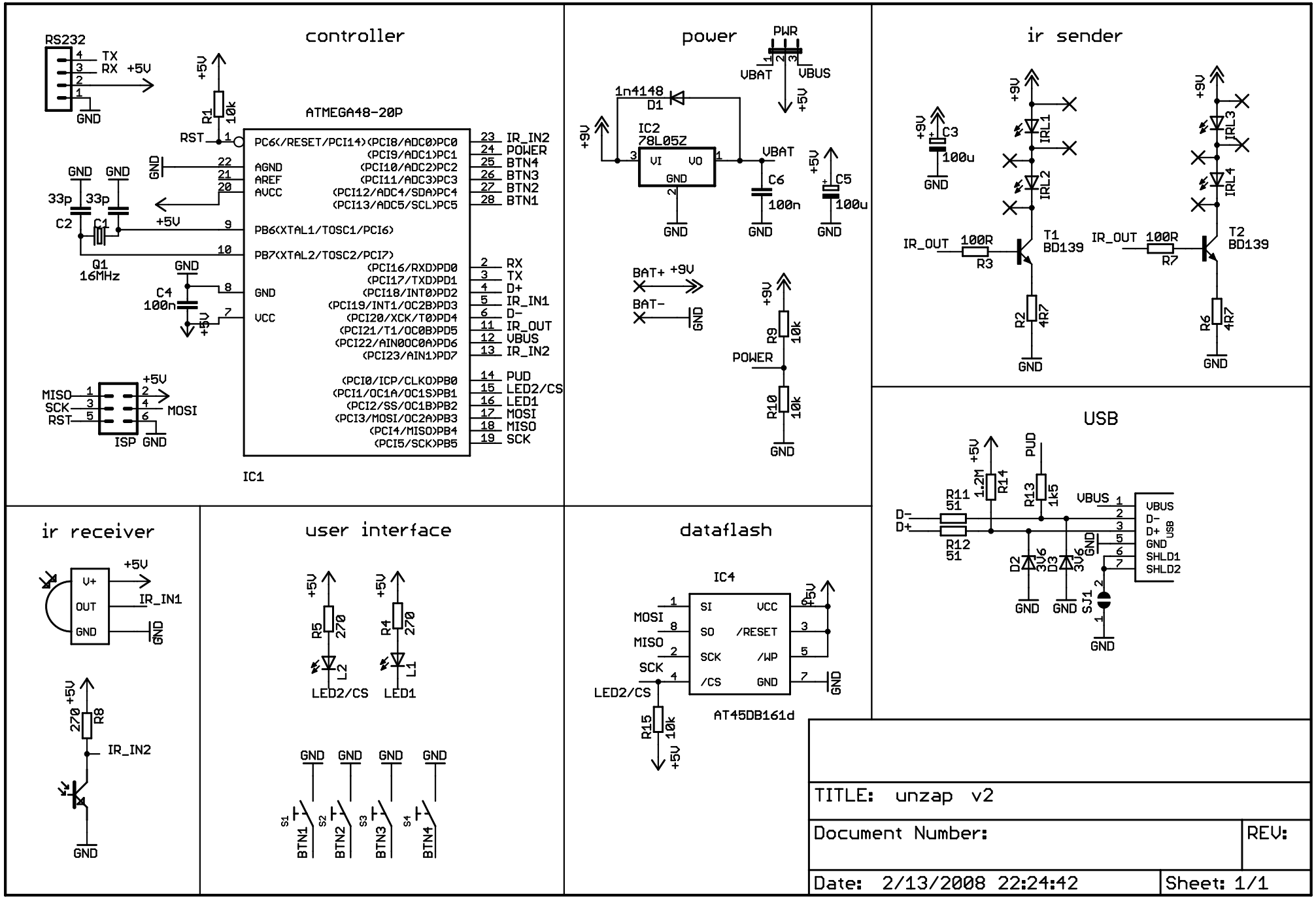
controller
RS232
TX
RX
+5V
GND
R1
10k
RST
ATMEGA48-20P
PC6(/RESET/PCI14)(PCI8/ADC0)PC0
(PCI9/ADC1)PC1
(PCI10/ADC2)PC2
(PCI11/ADC3)PC3
(PCI12/ADC4/SDA)PC4
(PCI13/ADC5/SCL)PC5
AGND
AREF
AVCC
PB6(XTAL1/TOSC1/PCI6)
PB7(XTAL2/TOSC2/PCI7)
(PCI16/RXD)PD0
(PCI17/TXD)PD1
(PCI18/INT0)PD2
(PCI19/INT1/OC2B)PD3
(PCI20/XCK/T0)PD4
(PCI21/T1/OC0B)PD5
(PCI22/AIN0OC0A)PD6
(PCI23/AIN1)PD7
GND
VCC
(PCI0/ICP/CLKO)PB0
(PCI1/OC1A/OC1S)PB1
(PCI2/SS/OC1B)PB2
(PCI3/MOSI/OC2A)PB3
(PCI4/MISO)PB4
(PCI5/SCK)PB5
IR_IN2
POWER
BTN4
BTN3
BTN2
BTN1
RX
TX
D+
IR_IN1
D-
IR_OUT
VBUS
IR_IN2
PUD
LED2/CS
LED1
MOSI
MISO
SCK
33p
C2
C1
Q1
16MHz
C4
100n
MISO
SCK
RST
MOSI
ISP
IC1
power
PWR
VBAT
VBUS
1n4148
D1
IC2
78L05Z
VI
VO
C6
100n
C5
100u
BAT+
BAT-
R9
10k
R10
10k
ir sender
C3
100u
IRL1
IRL2
IRL3
IRL4
IR_OUT
100R
R3
T1
BD139
R2
4R7
R7
T2
BD139
R6
4R7
USB
R11
51
R12
51
R14
1.2M
R13
1k5
D2
3V6
D3
3V6
SJ1
VBUS
D-
D+
GND
SHLD1
SHLD2
ir receiver
V+
OUT
IR_IN1
R8
270
IR_IN2
user interface
R5
270
R4
270
L2
L1
LED2/CS
LED1
S1
S2
S3
S4
BTN1
BTN2
BTN3
BTN4
dataflash
IC4
SI
SO
SCK
/CS
VCC
/RESET
/WP
GND
MOSI
MISO
SCK
LED2/CS
R15
10k
AT45DB161d
TITLE: unzap v2
Document Number:
REV:
Date: 2/13/2008 22:24:42
Sheet: 1/1